Electronics Documentation

1. Electronics Block Diagram

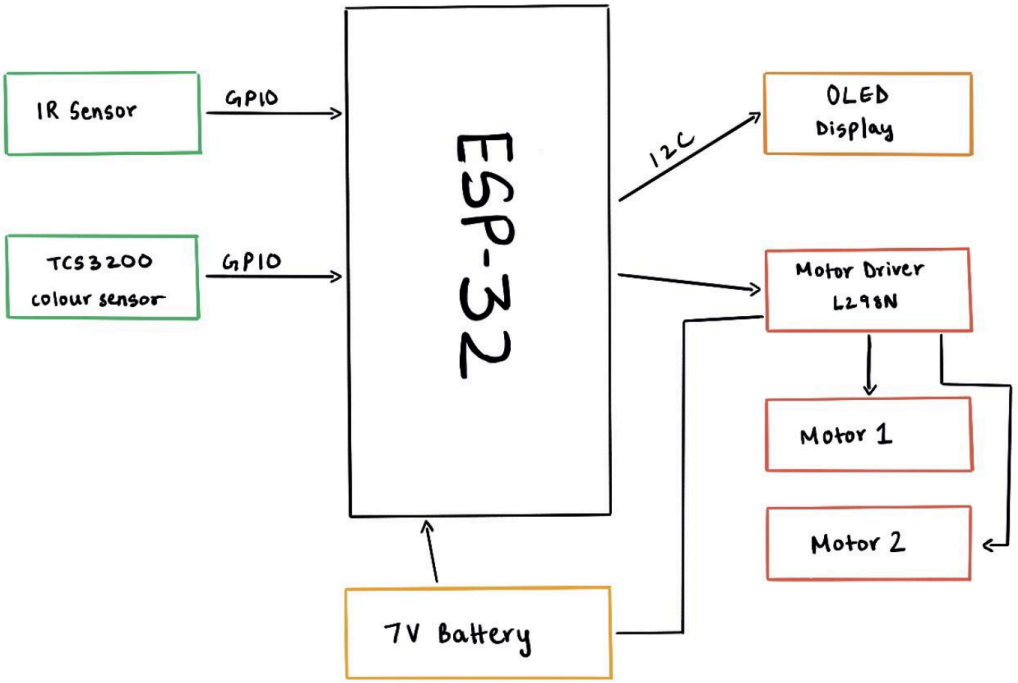

2. Components Table

Robot components

Maze components

Component	Quantity	Purpose	Justification
DC Motor	2	To move the wheels of the robot.	DC motors offer the necessary torque and easy speed control required to drive the robot's wheels, and two motors enable accurate turning and navigation.

Ultrasonic Sensor (HC SR04)	1	To detect distance of the robot from obstacles/walls.	Along with detecting presence of obstacles, ultrasonic sensor also tells the distance.
OLED Display	1	To display expressions of the robot.	An OLED display is small, bright, and low-power, making it ideal for showing clear expressions on the robot.
TCS3200 (Coloursensor)	1	To identify and differentiate colour-coded sections within the maze.	The TCS3200 detects RGB light intensity to identify colours accurately, allowing the robot to recognize different maze zones.
Battery	1	To supply power to the motor driver and ESP32, enabling the system to operate without a laptop.	A battery provides portable, stable power with the required voltage and current for the ESP32 and motor driver, enabling independent operation.
ESP 32	2	1- Processes input from sensors and generates control signals for robot movement. 2- Controls and regulates LED lighting patterns within the maze.	ESP32 is a powerful microcontroller capable of real-time processing and multiple output control, allowing it to efficiently manage both motor operations and LED lighting tasks simultaneously.
Power supply module	1	To regulate and distribute power to the LED lighting system in the maze.	It provides stable, regulated power to the LEDs, ensuring consistent lighting and protecting them from voltage fluctuations.
LED Strip Roll	1	To provide visual lighting across different sections of the maze.	LED strips offer flexible, energy-efficient lighting that can be arranged along the maze path to improve visibility and create clear, guided illumination.